Balustrade - Glass

Wholesale Racking Australia Pty Ltd

Square Spigot Core Drilled

Tested By
AZUMA DESIGN Pty Ltd

AZT0329.16

Nata Accredited Laboratory No. 15147

The results of the tests, calibrations and/or measurements included in this document are traceable to Australian/national standards.

1 Test Standards

The product is tested to the following standard only

- *AS/NZS 1170.1 - 2002 Structural design actions - Permanent, imposed and other actions*

2 Test Sample Description

2.1 General

Model No./Name	Square 280 Core Drilled
Customer	Wholesale Racking Australia Pty Ltd
Address	23 Cylde St, Islington NSW 2296
Azuma Testing Number	AZT 0329.16
Date of Test	06/10/2016

2.2 Barrier

Glass Material	Toughened
Glass Thickness	12 mm
Glass Panel Size	Height = 1200 mm Width = 1700 mm
Overall Size	Height = 1280 mm Width = 1700 mm
Glass Installation Type	2 x spigot clamp using 2 x grub screws with plate
Gap between bottom of barrier and ground level	80 mm
Complies with AS 2208	Yes
Handrail Used	No
Spigot Spacing	1100 mm

2.3 Spigots

Material	Duplex 2205
Overall Size	49.3 mm (W) x 49.3 mm (L) x 280 mm (H)
Base Plate (if applicable)	N/A
Drawing supplied	Yes
Fixing Method	100 mm Engagement CRL Qwikset Concrete

Figure 1: Spigot

3 Minimum Imposed Actions for Barriers

3.1 Concentrated Load

3.1.1 Procedure

From AS 1170.1 - 2002 - Subsection 3.6 Barriers - Table 3.3 Minimum imposed actions for Barriers.

1. Set the hydraulic ram to push on the handrail at the centerline between the two fixed points.
2. Record a datum from the center of the push area to a fixed point.
3. Smoothly increase the force acting on the side of the rail until the test force is equal to 600 N.
4. Hold the test force for 1 minute.
5. Record the deflection.
6. Remove the test force and after 2 minutes record the permanent deflection reading.

3.1.2 Results

Direction	Load Applied	Datum (mm)	Reading after load removed (mm)	Permanent Deflection (mm)
Outwards	600 N	455 mm	458 mm	3 mm
Downwards	600 N	482 mm	482 mm	0 mm

3.1.3 Pass/Fail Criteria

The following maximum deflection limits apply to this product:

$$\frac{Span}{60} = \frac{1700}{60} = 28.33mm \tag{1}$$

This value is only applicable while it remains less than 30 mm, otherwise 30 mm is maximum allowable deflection.

Criteria	Observation	Result
Outwards		
Deflection no more than 28.33 mm after load is removed	3 mm	Pass
Any damage, signs of breakage or fracture observed	Nil	Pass
Notes: Nil		
Downwards		
Deflection no more than 28.33 mm after load is removed	0 mm	Pass
Any damage, signs of breakage or fracture observed	Nil	Pass
Notes: Nil		

3.1.4 Pictures

Figure 2: Outwards Push

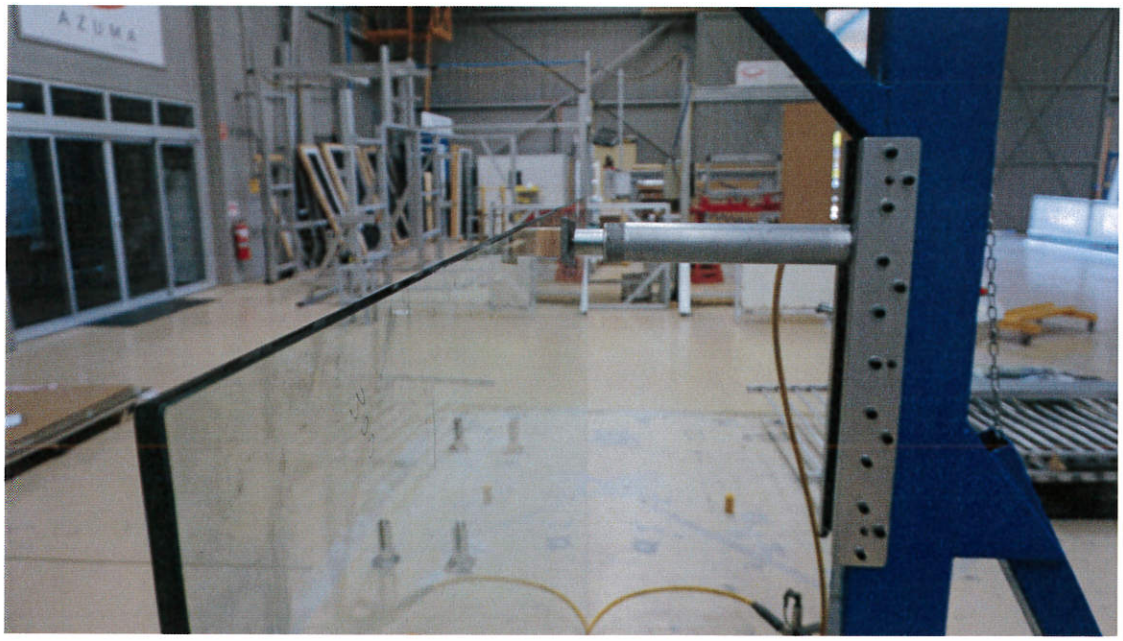

Figure 3: Outwards Push - Bend

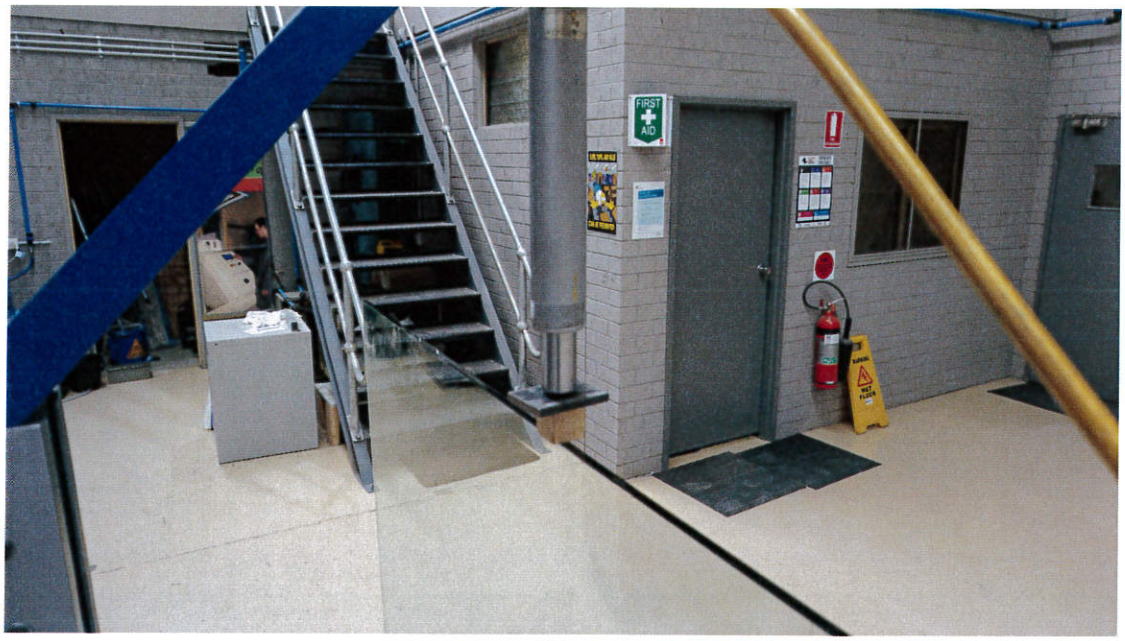

Figure 4: Downwards Push

3.2 Uniformly Distributed Load - VERTICAL

3.2.1 Procedure

From AS 1170.1 - 2002 - Subsection 3.6 Barriers - Table 3.3 Minimum imposed actions for Barriers.

1. Set the hydraulic ram to push on the handrail at the centerline between the two fixed points.
2. Record a datum from the center of the push area to a fixed point.
3. Smoothly increase the force acting on the side of the rail until the test force is equal to 600 N.
4. Hold the test force for 1 minute.
5. Record the deflection.
6. Remove the test force and after 2 minutes record the permanent deflection reading.

3.2.2 Calculation

The required uniformly distributed load for the glass panel is the imposed action multiplied by the width of the product:

$$RequiredForce(N) = ImposedAction(N/m) * WidthofthePanel(m) \tag{2}$$

Note: Width used is the above equation was 1700 mm.

3.2.3 Results

Uniformly Distributed Load	Load Applied	Datum (mm)	Reading after load removed (mm)	Permanent Deflection (mm)
350 N/m	595 N	482 mm	482 mm	0 mm
750 N/m	1275 N	482 mm	482 mm	0 mm

3.2.4 Pass/Fail Criteria

The following maximum deflection limits apply to this product:

$$\frac{Span}{60} = \frac{1700}{60} = 28.33mm \tag{3}$$

This value is only applicable while it remains less than 30 mm, otherwise 30 mm is maximum allowable deflection.

Criteria	Result	Pass/Fail
350 N/m (595 N)		
Deflection no more than 28.33 mm after load is removed	0 mm	Pass
Any damage, signs of breakage or fracture observed	Nil	Pass
Notes: Not Tested		
750 N/m (1275 N)		
Deflection no more than 28.33 mm after load is removed	0 mm	Pass
Any damage, signs of breakage or fracture observed	Nil	Pass
Notes: Nil		
Total Deflection	0 mm	Pass

Figure 5: Vertical Uniform Distributed Load

3.3 Uniformly Distributed Load - HORIZONTAL

3.3.1 Procedure

From AS 1170.1 - 2002 - Subsection 3.6 Barriers - Table 3.3 Minimum imposed actions for Barriers.

1. Set the hydraulic ram to push on the handrail at the centerline between the two fixed points.
2. Record a datum from the center of the push area to a fixed point.
3. Smoothly increase the force acting on the side of the rail until the test force is equal to 600 N.
4. Hold the test force for 1 minute.
5. Record the deflection.
6. Remove the test force and after 2 minutes record the permanent deflection reading.

3.3.2 Calculation

The required uniformly distributed load for the glass panel is the imposed action multiplied by the width of the product:

$$RequiredForce(N) = ImposedAction(N/m) * WidthofthePanel(m) \tag{4}$$

Note: Width used is the above equation was 1700 mm.

3.3.3 Results

Uniformly Distributed Load	Load Applied	Datum (mm)	Reading after load removed (mm)	Permanent Deflection (mm)
350 N/m	595 N	459 mm	459 mm	0 mm
750 N/m	1275 N	460 mm	462 mm	2 mm
1500 N/m	2400 N	N/A	N/A	N/A
3000 N/m	4800 N	N/A	N/A	N/A

3.3.4 Pass/Fail Criteria

The following maximum deflection limits apply to this product:

$$\frac{Span}{60} = \frac{1700}{60} = 28.33mm \tag{5}$$

This value is only applicable while it remains less than 30 mm, otherwise 30 mm is maximum allowable deflection.

Criteria	Result	Pass/Fail
350 N/m (595 N)		
Deflection no more than 28.33 mm after load is removed	0 mm	Pass
Any damage, signs of breakage or fracture observed	Nil	Pass
Notes: Nil		
750 N/m (1275 N)		
Deflection no more than 28.33 mm after load is removed	2 mm	Pass
Any damage, signs of breakage or fracture observed	Nil	Pass
Notes: Nil		
1500 N/m (2550 N)		
Deflection no more than 28.33 mm after load is removed	N/A	Not Tested
Any damage, signs of breakage or fracture observed	N/A	Not Tested
Notes: Nil		
3000 N/m (5100 N)		
Deflection no more than 28.33 mm after load is removed	N/A	Not Tested
Any damage, signs of breakage or fracture observed	N/A	Not Tested
Notes: Nil		
Total Deflection at 750 N/m Rating	2 mm	Pass

3.3.5 Pictures

Figure 6: Horizontal Uniform Load - 350 N/m

Figure 7: Horizontal Uniform Load - 750 N/m

4 Conclusion and Signatories

4.1 Conclusion

From the results achieved the sample is deemed to satisfy the loading requirements as per table 3.3 of AS1170.1- 2002 for the following classification:

- for a Category 'A' Domestic and residential activities - All areas within or serving exclusively one dwelling including stairs, landings, etc. but excluding external balconies and edges of roofs;
- for a Category 'B, E' Offices and work areas not included elsewhere including storage areas - Areas not susceptible to overcrowding in office and institutional buildings also industrial and storage buildings;
- for a Category 'C3' Areas without obstacles for moving people and not susceptible to over-crowding - Stairs, landings, external balconies, edges of roofs, etc.

NOTE: All classifications with equal or lower load specifications may be applied to this sample. For more information as to their specific use please see table 3.3 of AS1170.1 - 2002.

NOTE 2: This usage (under B,E) is for access to and safe working places normally used by operating, inspection, maintenance and servicing personnel.

4.2 Signatories

Tested By: ROB IRWIN

Signatory Name: ROB IRWIN

Signatory Signature:

Date: 6/10/16

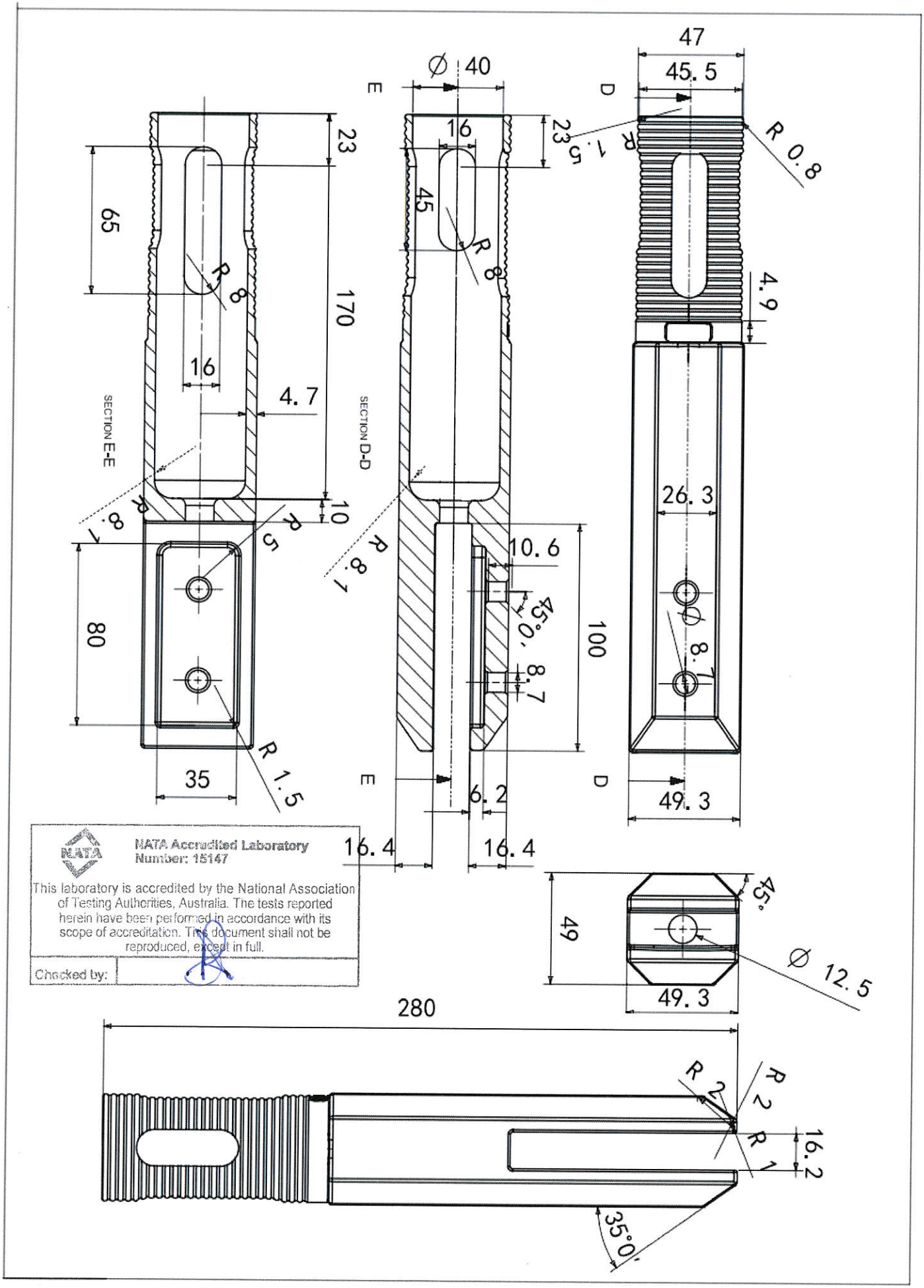

NATA Accredited Laboratory
Number: 15147

This laboratory is accredited by the National Association of Testing Authorities, Australia. The tests reported herein have been performed in accordance with its scope of accreditation. This document shall not be reproduced, except in full.

Checked by:

Square Core drill 280MM spigot.jpg

1/1

A2T0329.16

STANDARDSMARK LICENCE

SAI Global hereby grants:

Shandong Yaohua Glass Co., Ltd.

No. 7 Kaiyuan Road, Licheng Area, Jinan City, Shandong China

StandardsMark Licence

Manufactured to:

AS/NZS 2208:1996 - Safety glazing materials in buildings

"the StandardsMark Licensee" the right to use the STANDARDSMARK as shown below only in respect of the goods described and detailed in the Schedule which are produced by the Licensee or on behalf of the Licensee* and which comply with the appropriate Standard referred to above as from time to time amended. The Licence is granted subject to the rules governing the use of the STANDARDSMARK and the Terms and Conditions for certification and licence. The Licensee covenants to comply with all the Rules and Terms and Conditions.

Licence No: SMK40107

Issued : 3 June 2013
Expires : 2 June 2018

Originally Certified : 3 June 2013
Current Certification : 3 June 2013

Paul Butcher
Global Head – Assurance Services

Samer Chaouk
Head of Policy, Risk and Certification

NATA
NATA Accredited Laboratory
Number: 15147

This laboratory is accredited by the National Association of Testing Authorities, Australia. The tests reported herein have been performed in accordance with its scope of accreditation. This document shall not be reproduced except in full.

Checked by:

Certified Product™
Australian Standard

JAS-ANZ
WWW.JAS-ANZ.ORG/REGISTER

** For details of manufacture, refer to the licensee*

SAI GLOBAL
INFORM. INSPIRE. IMPROVE.

A2T0329.16

SCHEDULE TO

STANDARDSMARK LICENCE

SAI Global hereby grants:

Shandong Yaohua Glass Co., Ltd.

No. 7 Kaiyuan Road, Licheng Area, Jinan City, Shandong China

StandardsMark Licence

Manufactured to:

AS/NZS 2208:1996 - Safety glazing materials in buildings

Model identification of the goods on which the STANDARDSMARK may be used:

Description	Type of Safety Glass	Glass Thickness Range (mm)	Colours	Grade	Interlayer Thickness	Furnace / Laminating Line	Maximum Loading / Laminated Size	Interlayer Manufacture	Date Endorsed
Flat-Plain	Heat Strengthened Laminated	8 - 16	clear, grey, bronze, green, ultra clear	A	0.38mm, 0.76mm, 1.52mm	Line 1	2440mm x 3660mm	DuPont, Decent	29 May 2013
Flat-Plain	Laminated	6 - 16	clear, grey, bronze, green, ultra clear	A	0.38mm, 0.76mm, 1.52mm	Line 1	2440mm x 3660mm	DuPont, Decent	29 May 2013
Flat-Plain	Toughened	4 - 19	clear, grey, bronze, green, ultra clear	A		Furnace 1	2440mm x 4800mm		29 May 2013
Flat-Plain	Toughened Laminated	8 - 16	clear, grey, bronze, green, ultra clear	A	0.38mm, 0.76mm, 1.52mm	Line 1	2440mm x 3660mm	DuPont, Decent	29 May 2013

End of Record

NATA Accredited Laboratory
Number: 15147

This laboratory is accredited by the National Association of Testing Authorities, Australia. The tests reported herein have been performed in accordance with its scope of accreditation. This document shall not be reproduced, except in full.

Checked by:

Licence No: SMK40107 **Issued Date:** 3 June 2013

This schedule supersedes all previously issued schedules

SAI GLOBAL
INFORM. INSPIRE. IMPROVE.

* For details of manufacture, refer to the licensee

A2T0329.16